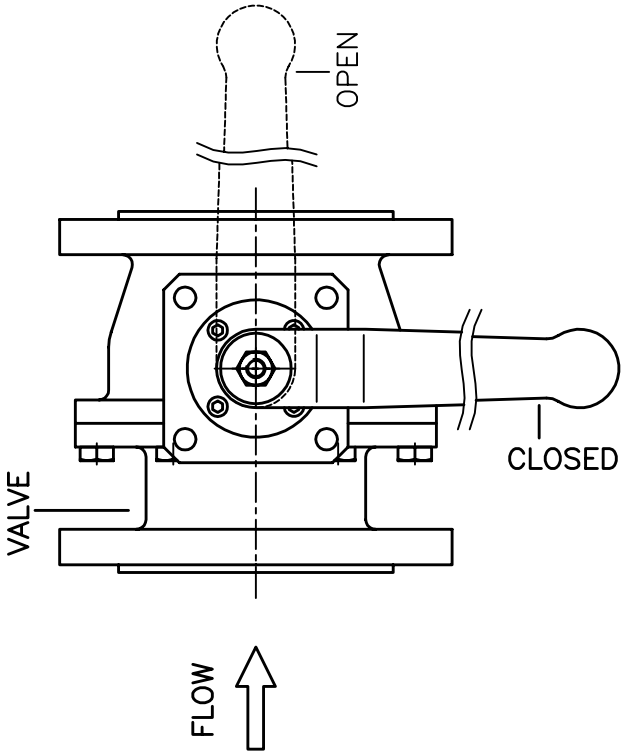

1

BE SURE IN WHAT POSITION THE VALVE IS, CLOSED OR OPEN.

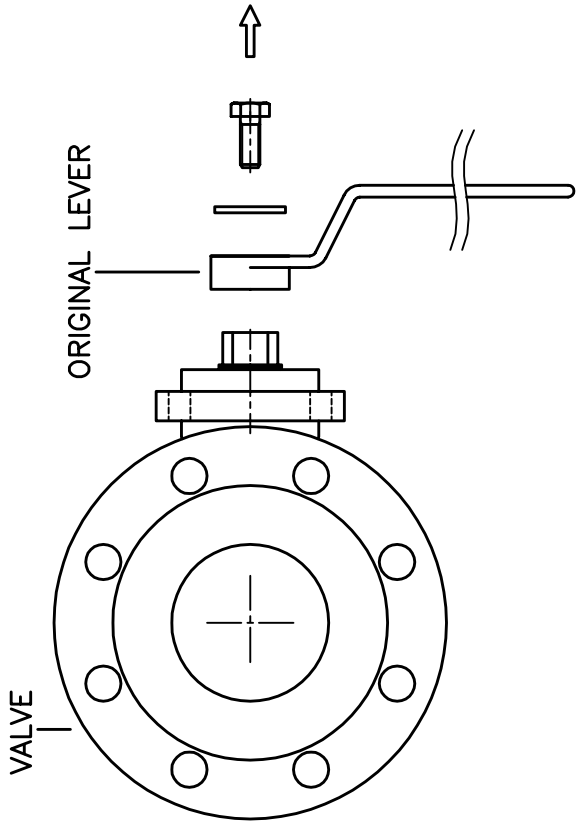

2

TAKE THE ORIGINAL LEVER FROM THE VALVE.

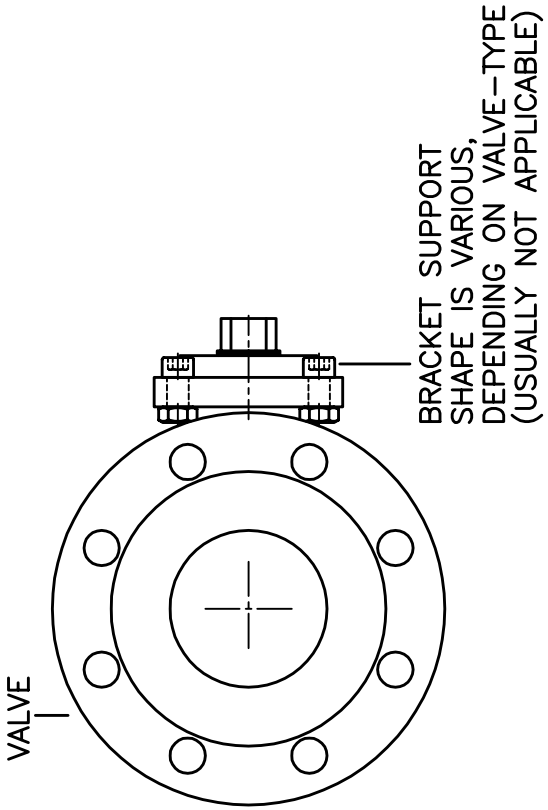

3

MOUNT THE BRACKET-SUPPORT, IF APPLICABLE.

GST SYSTEME
Alzenauerstraße 21; D-63517 Rodenbach
Tel.: ++49(0)6184/9507-0
E-Mail: info@gst-systeme.de
Copyright GST-SYSTEME GMBH

Rev.	Drawn	Date	Checked

Drawn: JP | Date: 03.09.1997 | Checked:

Mounting Instruction for Ballvalve
NDL Ninety Degree Lock
Page 1 of 3

Drawingnumber: LS1200029R01

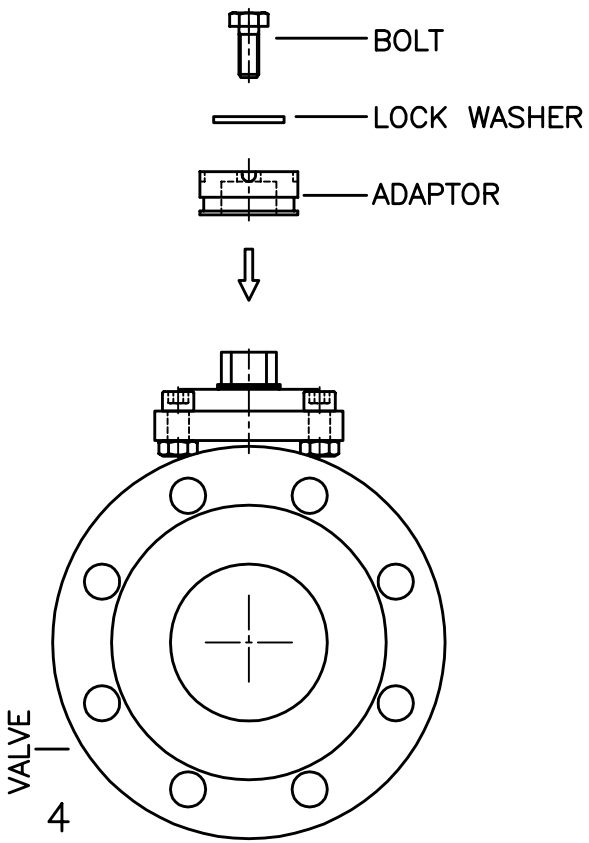

4

MOUNT THE ADAPTOR ON THE VALVE STEM WITH THE ORIGINAL BOLT OR NUT AND LOCK WASHER.

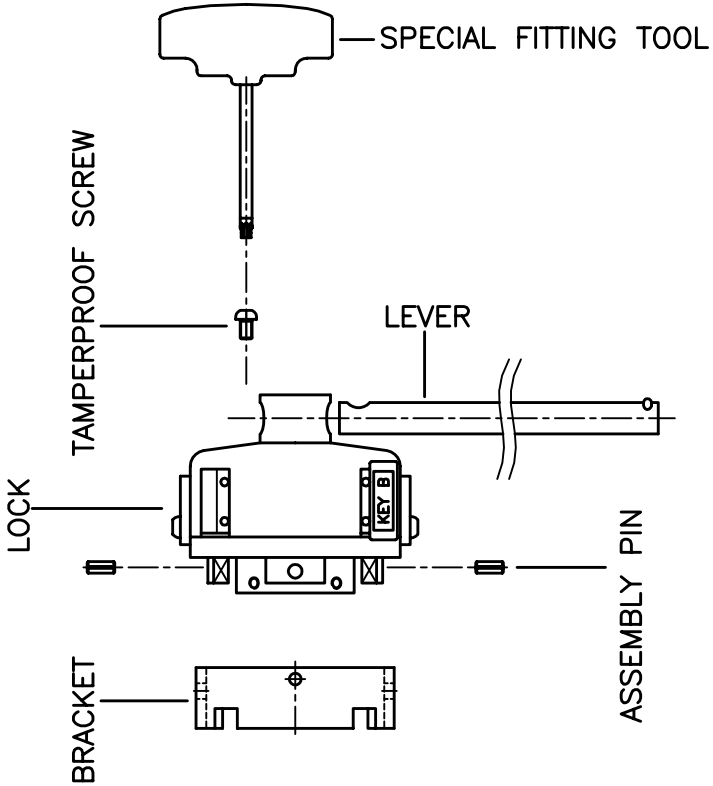

5

MOUNT THE LEVER WITH ONE TAMPERPROOF SCREW M6x10 AND MOUNT THE BRACKET WITH 4 ASSEMBLY PINS.

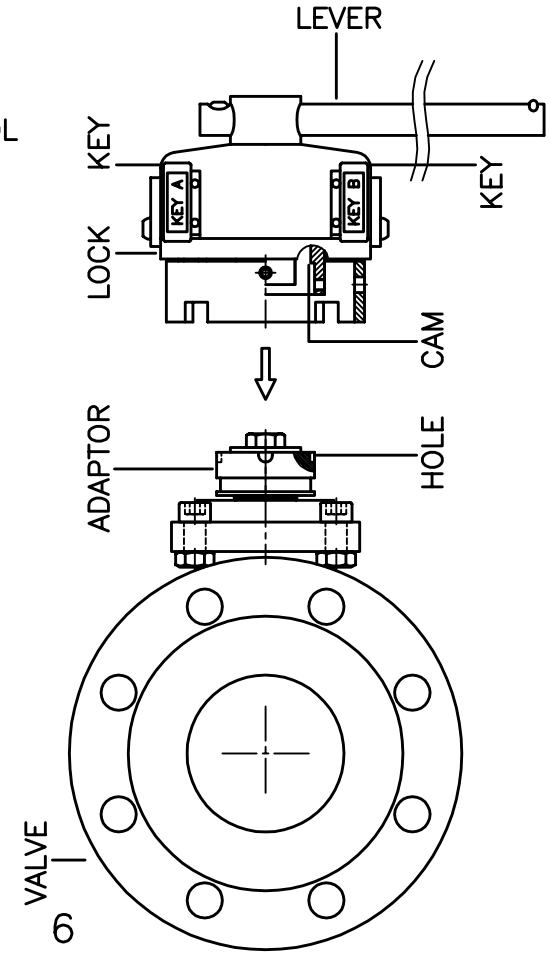

6

INSERT ALL (1 OR 2) KEYS IN THE LOCK AND PLACE IT ON THE ADAPTOR WITH THE KEYS IN FLOW DIRECTION AND LEVER IN THE CORRECT POSITION (CLOSED OR OPEN): BE SURE THAT THE CAMS OF THE LOCK FALL INTO THE HOLES OF THE ADAPTOR

GST SYSTEME
Alzenauerstraße 21; D-63517 Rodenbach
Tel.: ++49(0)6184/9507-0
E-Mail: info@gst-systeme.de
Copyright GST-SYSTEME GMBH

Rev.	Drawn	Date	Checked

Drawn: JP | Date: 03.09.1997 | Checked:

Mounting Instruction for Ballvalve
NDL Ninety Degree Lock
Page 2 of 3

Drawingnumber: LS1200030R01

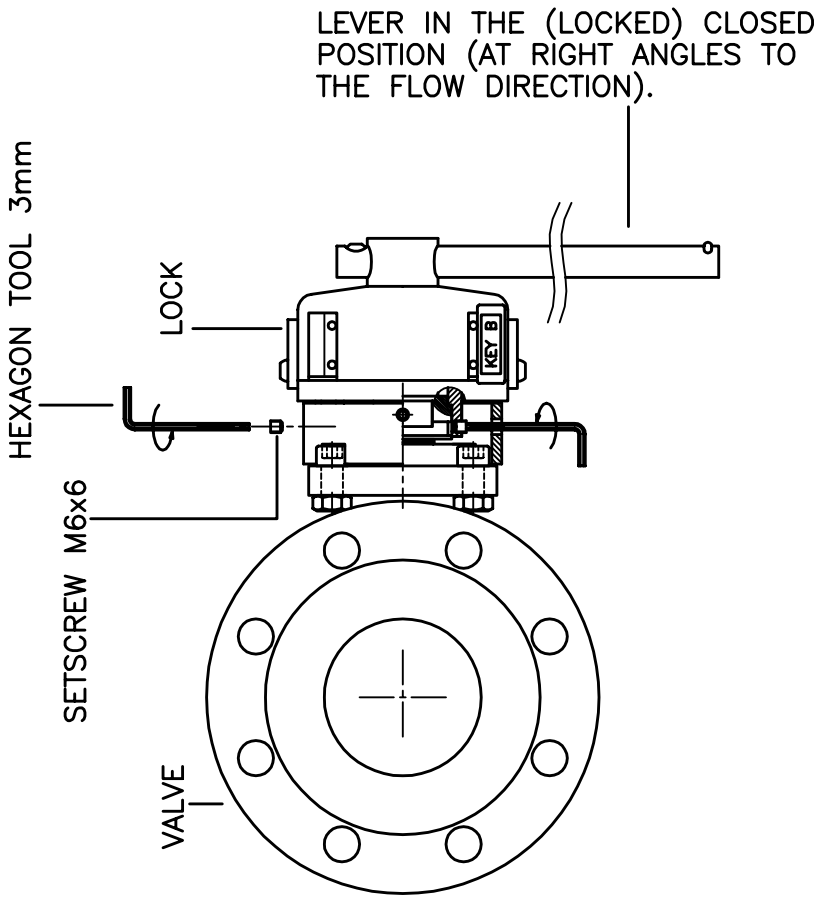

7

ATTACH THE LOCK TO THE ADAPTOR THROUGH 2 HOLES IN THE BRACKET WITH 2 SETSCREWS M6x6.

IF THE VALVE IS CLOSED THE LEFT (CLOSE) KEY CAN BE RELEASED.

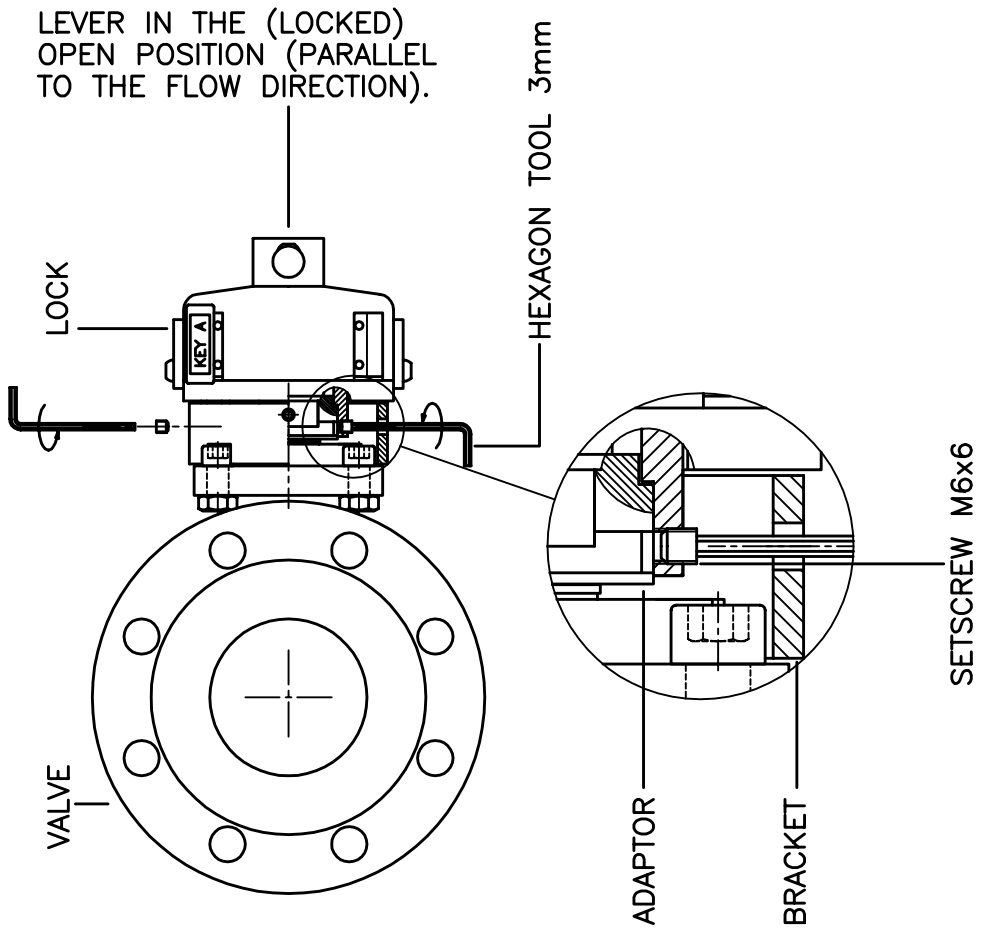

8

INSERT ALL (1 OR 2) KEYS IN THE LOCK AND OPERATE THE VALVE (TURN 90°). MOUNT THE OTHER 2 SETSCREWS

IF THE VALVE IS OPEN THE RIGHT (OPEN) KEY CAN BE RELEASED.

GST SYSTEME
Alzenauerstraße 21; D-63517 Rodenbach
Tel.: ++49(0)6184/9507-0
E-Mail: info@gst-systeme.de
Copyright GST-SYSTEME GMBH

Rev.	Drawn	Date	Checked

Drawn: JP | Date: 03.09.1997 | Checked:

Mounting Instruction for Ballvalve
NDL Ninety Degree Lock
Page 3 of 3

Drawingnumber: LS1200031R01